LINSEIS

pushing boundaries

TF-LFA L54

Thin Film **Laser Frequency Analyzer**

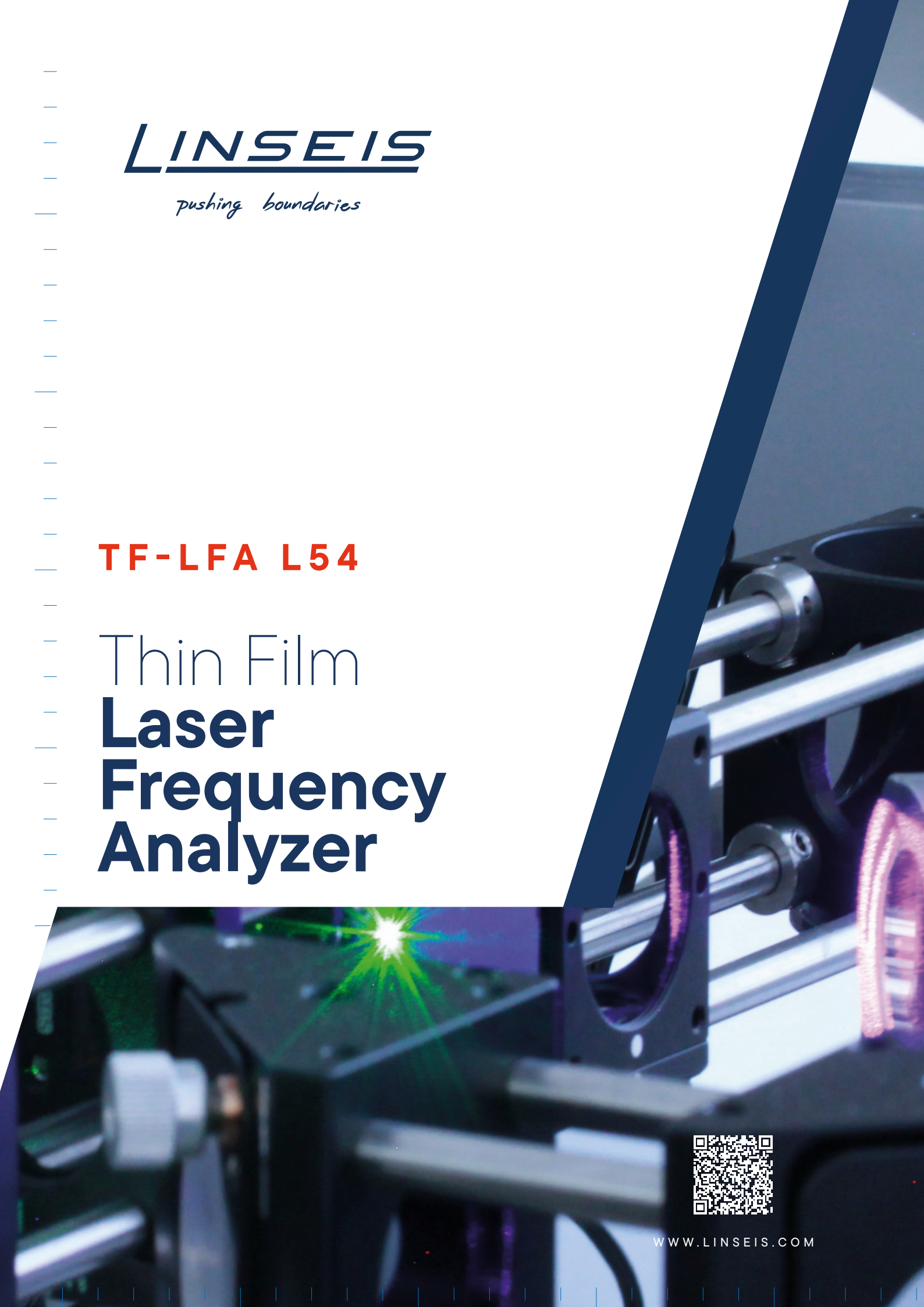

WWW.LINSEIS.COM

Since 1957 LINSEIS Corporation has been delivering outstanding service, know-how and leading innovative products in the field of thermal analysis and thermo-physical properties.

Customer satisfaction, innovation, flexibility, and high quality are what LINSEIS represents. Thanks to these fundamentals, our company enjoys an exceptional reputation among the leading scientific and industrial organizations. LINSEIS has been offering highly innovative benchmark products for many years.

The LINSEIS business unit of thermal analysis is involved in the complete range of thermoanalytical equipment for R&D as well as quality control. We support applications in sectors such as polymers, chemical industry, inorganic building materials, and environmental analytics. In addition, thermophysical properties of solids, liquids, and melts can be analyzed.

Rooted in a strong family tradition, LINSEIS is proudly steered into its third generation, maintaining its core values and commitment to excellence, which have been passed down through the family leadership. This generational continuity strengthens our dedication to innovation and quality, embodying the essence of a true family-run business.

LINSEIS provides technological leadership. We develop and manufacture thermoanalytic and thermophysical testing equipment to the highest standards and precision. Due to our innovative drive and precision, we are a leading manufacturer of thermal analysis equipment.

The development of thermoanalytical testing machines requires significant research and a high degree of precision. LINSEIS Corp. invests in this research to the benefit of our customers.

CLAUS LINSEIS
CEO DIPL. PHYS.

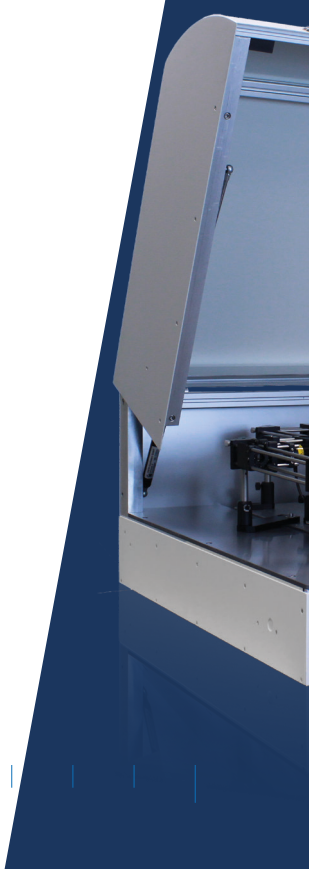

To strive for the best due diligence and accountability is part of our DNA. Our history is affected by German engineering and strict quality control.

We want to deliver the latest and best technology for our customers. LINSEIS continues to innovate and enhance our existing thermal analyzers. Our goal is to constantly develop new technologies to enable continued discovery in Science.

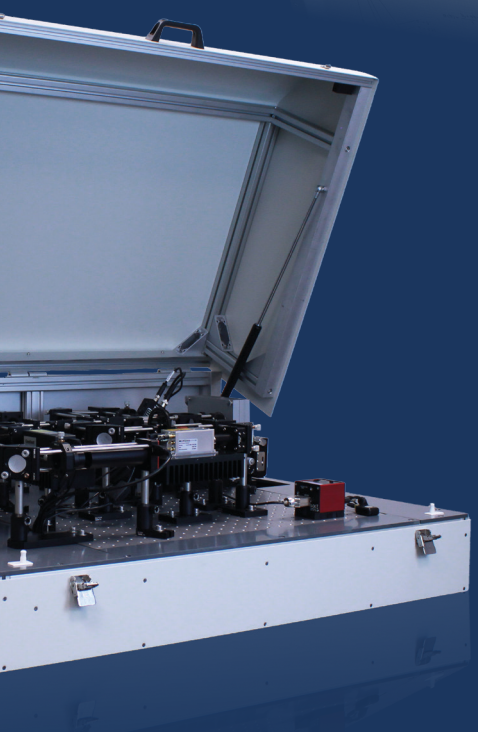

Engineering & Innovation

Thin Film Laser **Frequency Analyzer**

Information about thermophysical properties of materials and heat transfer optimization of final products is becoming more and more vital for industrial applications. Over the past few decades, non-distructive optical methods have developed into the most commonly used technique for the measurement of the thermal diffusivity and thermal conductivity of various kinds of solids, powders and liquids. Thermophysical properties of thin-films are becoming more and more important in industries such as, phase-change optical disk media, thermo-electric materials, light emitting diodes (LEDs), phase change memories, flat panel displays and the semiconductor industry. All these industries deposit a film on a substrate in order to give a device a particular function. Since the physical properties of these films differ from those of bulk materials, these data are required for accurate thermal management predictions.

Thermal properties

- Thermal Conductivity
- Volumetric Heat Capacitiy
- Thermal Diffusivity
- Thermal Effusivity
- Thermal Boundary Conductance

Thin Films

Thin films are materials with thicknesses from nanometers to micrometers, applied to surfaces. Their thermophysical properties differ significantly from those of bulk materials depending on thickness and temperature. Thin films are typically used in semiconductors, LEDs, fuel cells, and optical storage media.

Different kinds of thin films

- Thin film: Layer of few nm to µm
- Films are grown on specific substrate
- Typical growing techniques include
  - PVD (e.g. Sputtering, thermal evaporation)
  - CVD (PECVD, LPCVD, ALD)
  - Drop casting, Spin coating & Printing
- Various kinds of films, including:
  - Semiconducting films (e.g. thermoelectric materials, sensors, transistors)
  - Metallic films (used as contacts)
  - Thermal barrier coatings
  - Optical coatings

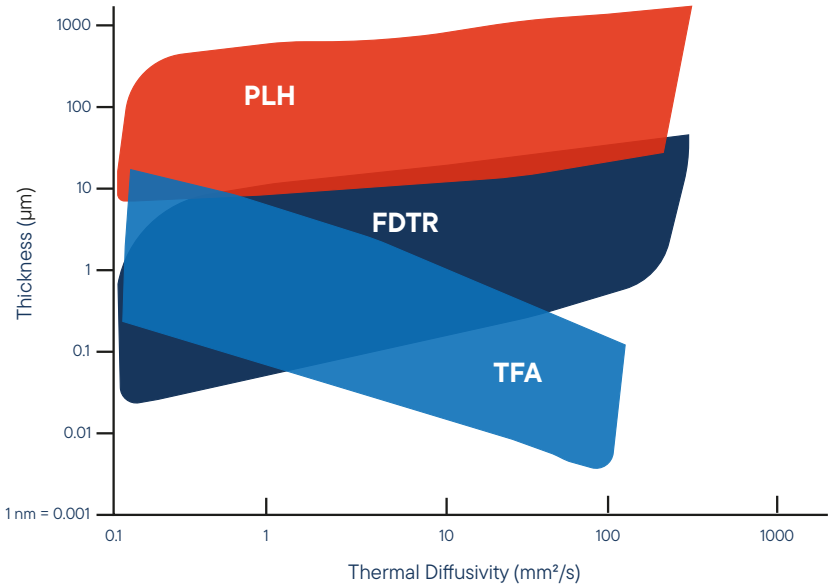

Multilayer sample

Thin film
(e.g. semiconductor, metal, organic, oxide)

Substrate
(e.g. Si, Si3N4, fused silica)

Unique **Features**

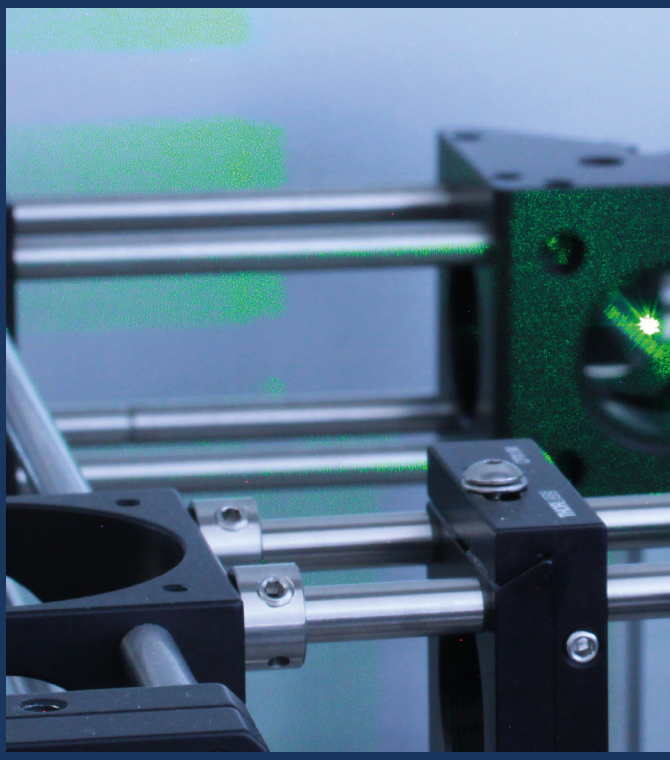

Complete thermal characterization of thin films

- Thermal conductivity $\frac{W}{mK}$
- Thermal diffusivity $\frac{m^2}{s}$
- Thermal effusivity $\frac{Ws^{1/2}}{m^2K}$
- Volumetric heat capacity $\frac{J}{m^3K}$

No more assumptions of heat capacity and density of thin films.

Determination of the thermal contact resistance/conductance

Measure the thermal contact between two adjacent layers (e.g. sample to surface or sample to transducing layer)

Anisotropy measurements

Optional anisotropy function, which allows the measurement of the thermal conductivity in the cross-plane (through the material) and in-plane (perpendicular to the laser excitation/Patented: EP4459262B1) direction.

Broad temperature range

The instrument is capable to measure the thermal properties of thin films from room temperature up to 500 °C.

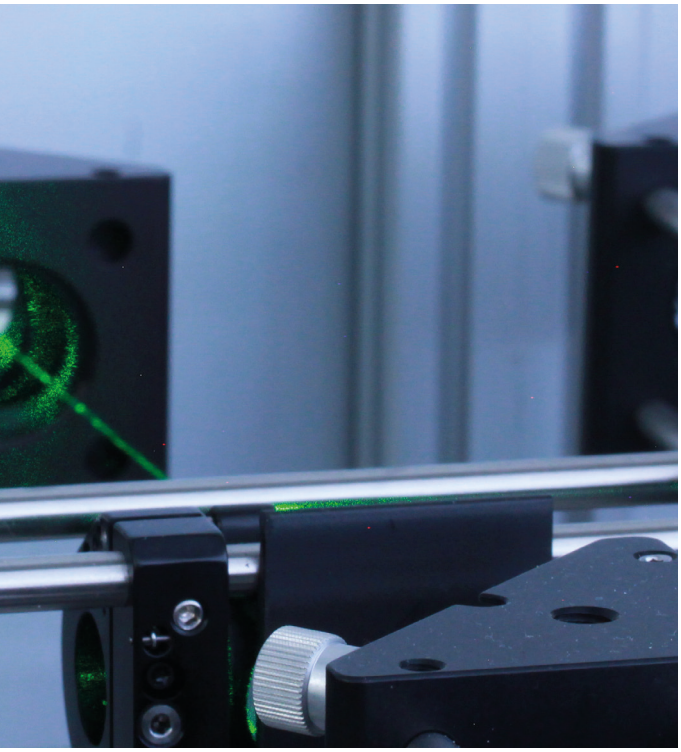

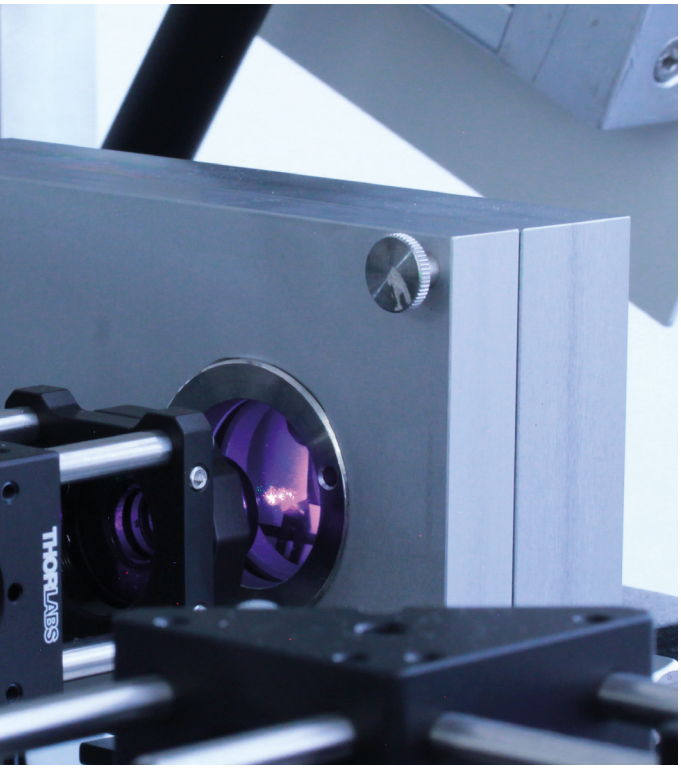

Thermal mapping

The optional sample mapping feature allows for tracking the thermal properties of a sample across specific areas or points on its surface, making it ideal for checking homogeneity. The mapping resolution can be flexibly adjusted, from coarse screening to high-resolution grids, depending on the specific measurement requirements.

Automatic optimization

Effortless optimization of the laser beam focusing to improve the measurement results.

Integrated Camera

The integrated camera simplifies the process by providing additional visual information. This allows the user to actually see the sample surface and therefore decide, where interesting spots are located on the sample.

Flexible Probe Laser Options

Selectable transducer material (e.g., gold, aluminium, molybdenum, etc.) with optimized probe laser wavelengths to ensure reliable signal detection. An optional dual-laser setup provides maximum flexibility by supporting both transducer materials within one system.

Flexible Focusing Optics

A set of interchangeable focusing objectives enables the laser spot size to be adapted, depending on the required spatial resolution and measurement conditions.

deliv

outst

ser

ering

anding

vice

FDTR
Frequency Domain

Theory of Frequency Domain Thermoreflectance

FDTR is a contactless characterization technique for measuring thermal properties of thin films in the frequency domain. This method utilizes the effect of thermoreflectance to establish a highly sensitive thermometer that detects the surface temperature of the sample by monitoring its reflectivity. A continuous wave laser (probe laser) with 532 nm wavelength is used for detection, while heating is achieved with a harmonically modulated pump laser at a different wavelength (405 nm). Local heating induces changes in the reflectivity, and the phase lag between the thermal excitation and the detection is measured using a lock-in amplifier. Modelling the response in the frequency domain with a diffusive heat transport model allows us to determine the thermal conductivity, volumetric heat capacity, thermal diffusivity, thermal effusivity and thermal interface conductance. A thin metallic transducer layer (50 -70 nm in thickness) is deposited on top of the surface of the samples to enhance the temperature coefficient of reflectance, dR/dT, and at the same time to reduce the optical penetration depth in the material.

Simplified schematic setup

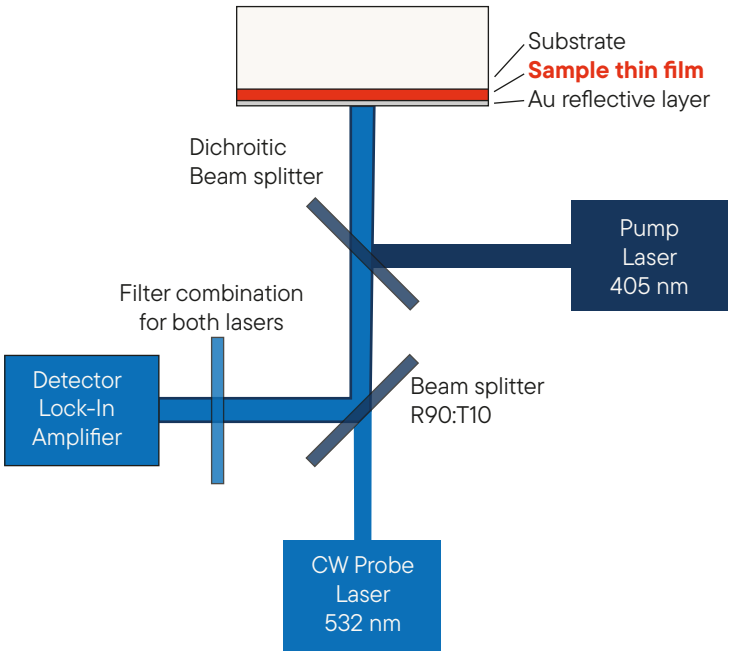

Comparison of FDTR **and TDTR Methods**

Our advanced FDTR (Frequency-Domain Thermoreflectance) system offers significant advantages over the traditional TDTR (Time-Domain Thermoreflectance) method, optimizing the setup and enhancing measurement stability.

No need for probe laser adjustment: Unlike the TDTR arrangement, where the probe laser must be adjusted relative to the sample due to slight changes in reflection when the sample is altered, our FDTR system eliminates this requirement. Our system includes automatic focusing, which continuously adjusts the probe laser's focus to accommodate any changes in the sample, ensuring optimal measurement conditions without manual intervention

Aligned lasers: With perfectly aligned lasers in our FDTR system, there is no need to adjust the probe laser beam, resulting in a simpler sample setup and more stable measurements.

Broader measuring range: Our FDTR outperforms even nano-pulsed TDTR setups with a broader measuring range. Thinner samples layers and thin films with higher thermal conductivity can be measured.

No need for assumptions: Our comprehensive evaluation algorithm allows you to measure thin films without any assumptions. All you need to know is the sample thickness.

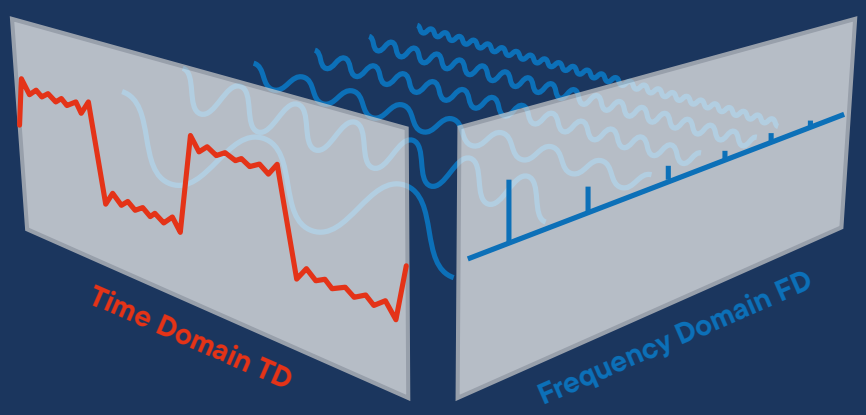

Advantages of FDTR:

- Broader measuring range
- Easier handling
- Higher stability
- More precise results
- Ability to measure thermal contact resistance between two layers
- No need for assumptions about heat capacity and density of thin sample films

Thermal conductivity anisotropy

In the development of new batteries, the flow direction of the emerging heat during operation plays a crucial role. Therefore, it is important to know, that the thermal conductivity can differ in different directions within the material, which is called anisotropy. This typically occurs in thin films. The two main axes have special names: one is perpendicular to the surface, known as cross-plane, while in-plane refers to heat flow parallel to the surface. Understanding both types is essential, especially for materials used in electronics, where efficient heat dissipation is critical.
In-plane thermal conductivity is particularly important in battery materials to manage heat flow across cell layers, impacting safety and efficiency. On the other hand, thermal barrier coatings rely on low cross-plane thermal conductivity making them ideal for applications where heat should be isolated to protect sensitive underlying components. An example for that kind of coating material is silicon dioxide SiO_2 thin films.

Two-dimensional materials, like $PdSe_2$ crystals offer highly exiting chances in the evolution of efficient energy conversion and thermal management, due to the anisotropic structure and so thermal properties. To entangle these features and exploit these unique attributes, anisotropic thermal investigations have to be done.

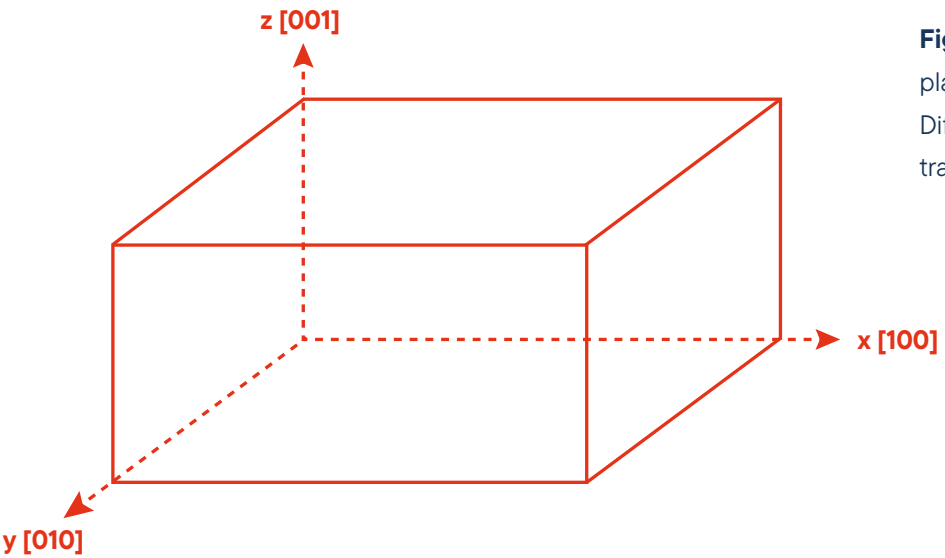

Figure 1: Main crystallographic planes of $PdSe_2$. Different directions of heat transport within the crystal.

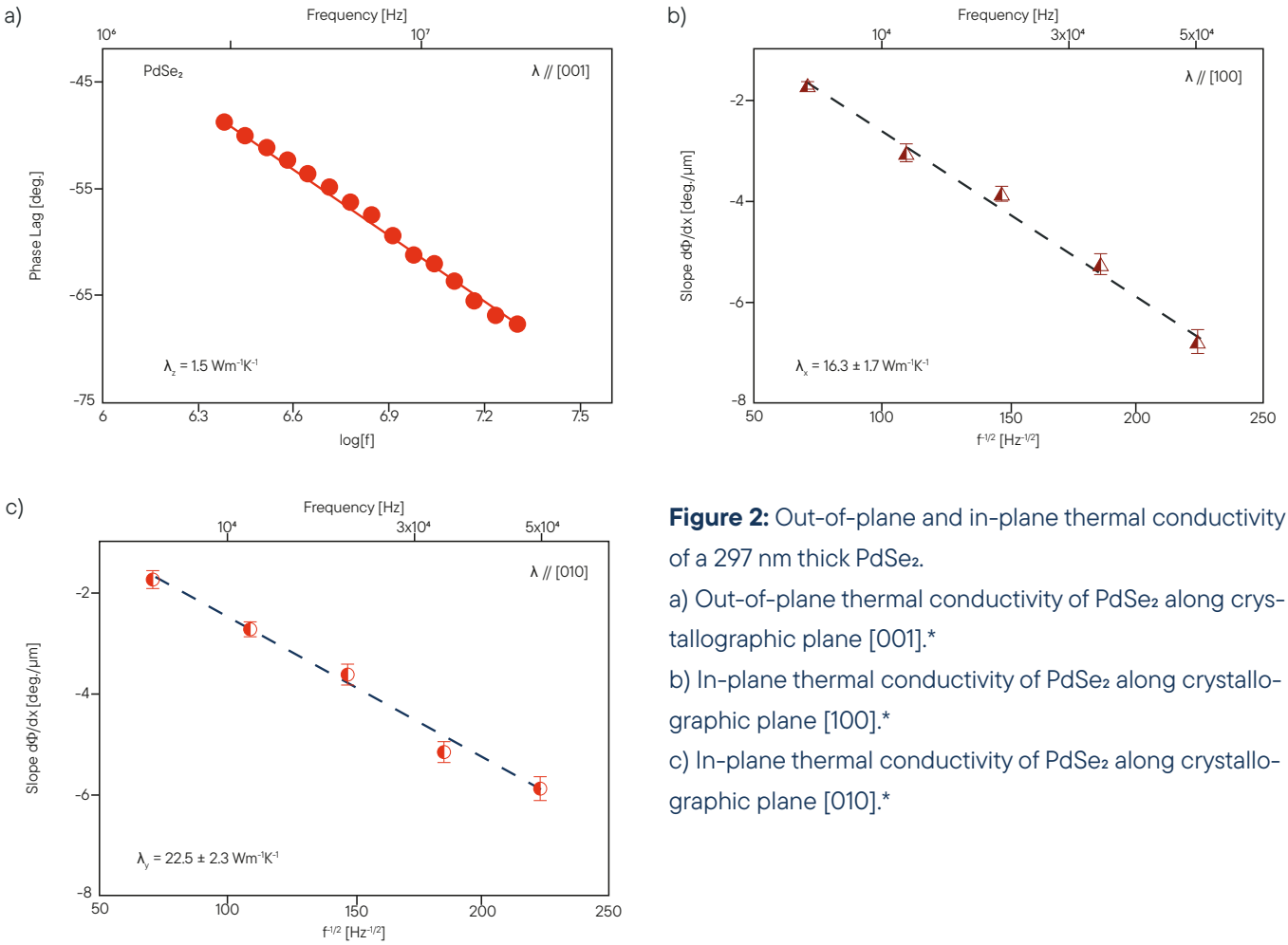

Figure 2: Out-of-plane and in-plane thermal conductivity of a 297 nm thick $PdSe_2$.

a) Out-of-plane thermal conductivity of $PdSe_2$ along crystallographic plane [001].*

b) In-plane thermal conductivity of $PdSe_2$ along crystallographic plane [100].*

c) In-plane thermal conductivity of $PdSe_2$ along crystallographic plane [010].*

The **TF-LFA** offers the possibility to measure the thermal conductivity of such a 2D material not only in both major directions, in- and out-of-plane, (see Fig. 2 b & 2 c) even over the axis of rotation of the surface in two different crystallographic planes.

*Measurements were provided by Dr. Juan Sebastiàn Reparaz

pus
bound

hing
aries

Software

All thermo analytical devices of LINSEIS are PC controlled, and the individual software modules exclusively run under Microsoft® Windows® operating systems. The complete software package consists of 3 modules: temperature control, data acquisition and data evaluation. The LINSEIS software encounters all essential features for measurement preparation, execution and evaluation, just like with other thermoanalytical experiments.
With the help of our specialists and application experts, LINSEIS has developed user-friendly and highly practical software for efficient operation.

General Software

- Fully compatible MS® Windows™
- Data security in case of a power failure
- Evaluation of current measurement
- Curve comparison
- Storage and export of evaluation results
- Export and import of data in ASCII format
- Data export to MS Excel

Measurement Software

- Easy and user-friendly data input for temperture segments, gases etc.
- Fully automated measurement

Evaluation Software

- Determination of contact resistance
- Multilayer heat transport model to extract the thermal conductivity, thermal diffusivity, thermal effusivity and volumetric heat capacity at once
- Measurement feasibility check
- Sensitivity plot

Product Overview

Technical **Specifications**

Sample dimensions	Any shape with lateral dimensions between 2 mm x 2 mm and 25 mm x 25 mm		
Thin film samples	**Standard version***	**With measurement range extension***	
	Low conductive material: From 30 nm to 20 µm Moderate conductive material: From 200 nm to 20 µm High conductive material: From 1 µm to 20 µm	Low conductive material: From 10 nm to 20 µm Moderate conductive material: From 10 nm to 20 µm High conductive material: From 80 µm to 20 µm	
Temperature range	-100 °C up to 500 °C Sample holder for 4“ Wafer (only RT)		
Measured properties	Thermal conductivity: 0.01 W/mK - 2000 W/mK Thermal diffusivity: 0.01 mm^2/s - 1200 mm^2/s Thermal interface resistance: 0.1 MW/m^2K - 100 MW/m^2K Volumetric specific heat capacitiy: 0.1 MJ/m^3K - 10 MJ/m^3K Thermal effusivity: 1000 $Ws^{1/2}/m^2K$ - 100000 $Ws^{1/2}/m^2K$		
Options	**Anisotrophy**	**Sample mapping**	**Flexible Probe Laser**
	Hardware and Software extension to extend the capabilities of the system to measure the in-plane thermal transport properties. Thus anisotropy investigations can be performed. **Patented: EP4459262B1**	Scanning multiple positions of the sample pointwise or clusterwise. Mapping area: 10 mm^2 Stepsize: 50 µm	Selectable transducer material (e.g., gold, aluminium, molybdenum, etc.) with optimized probe laser wavelengths to ensure reliable signal detection. An optional dual-laser setup provides maximum flexibility by supporting both transducer materials within one system.
Atmosphere	inert, oxidizing or reducing vaccuum up to 10 E^{-4}		
Integrated Camera	Allows the user to view the present sample surface and the position of the laser beams to record the actual measurement position		
Pump laser	CW Laser (405 nm, 300 mW, modulations frequency up to 200 MHz)		
Probe laser	CW Laser (532 nm, 25 mW)		
Photodetector	Si Avalanche Photodetector, active diameter: 0.2 mm, bandwidth: DC - 400 MHz		
Power supply	AC 100 V ~ 240 V, 50/60 Hz, 1 kVA		
Software	Included. Software package using multi-layer analysis for calculation of thermophysical properties		

*actual thickness range depends on sample

Applications

CVD Diamond - Thermal conductivity

High-conductivity diamond samples can be measured using the Linseis Laser Frequency Analyzer (TF-LFA), which utilizes the Frequency Domain Thermoreflectance technique to characterize thermal behavior and ensure quality control in applications where efficient heat dissipation is critical. Accurate thermal conductivity measurements are essential to verify the quality and performance of diamond samples, as factors such as grain size, purity, and thickness can influence the transport properties.

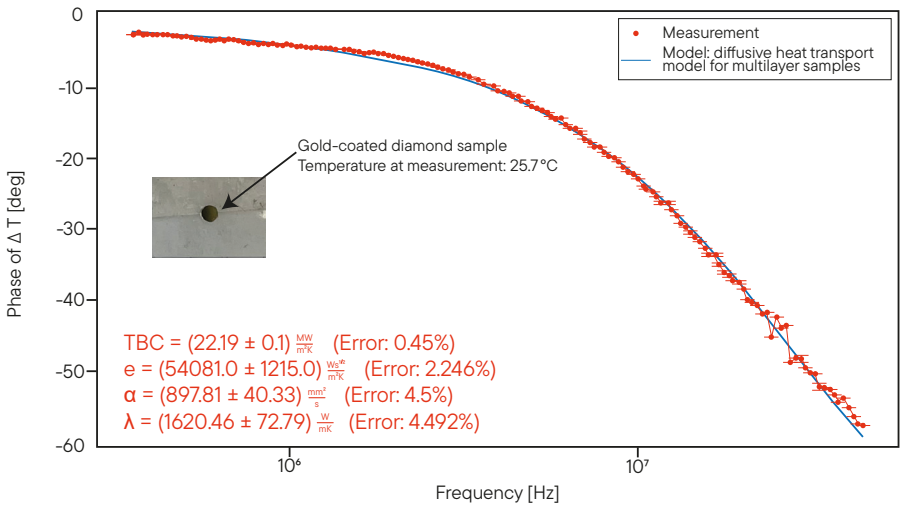

Measurement of the thermal properties of CVD diamond. The x-axis displays the logarithmically scaled frequency in Hertz, while the y-axis represents the phase shift between the excitation by the pump laser and the probe laser. Where λ is the thermal conductivity, α is the thermal diffusivity, e is the thermal effusivity and TBC is the thermal boundary conductance between the transducer layer (gold) and the sample (diamond). It determines how well a combination of materials is able to exchange heat with each other.

Frequency Domain Thermoreflectance (FDTR) is a preferred method for measuring thermal conductivity in materials like CVD diamond, especially in thin films and micro-scale samples where high spatial resolution is essential. The Linseis Laser Frequency Analyzer (TF-LFA) is an ideal tool for this purpose. FDTR uses a modulated laser to induce localized heating in the sample and measures the material‘s thermoreflectance response at varying modulation frequencies. This technique allows researchers to determine thermal conductivity by modeling the heat flow through the diamond and its interfaces.

Linseis Service Lab

Aluminum nitride (AlN)

Aluminium nitride thin films are used in a variety of fields due to their unique combination of electrical insulation and high thermal conductivity, making them ideal for use in microelectronics or optoelectronics.

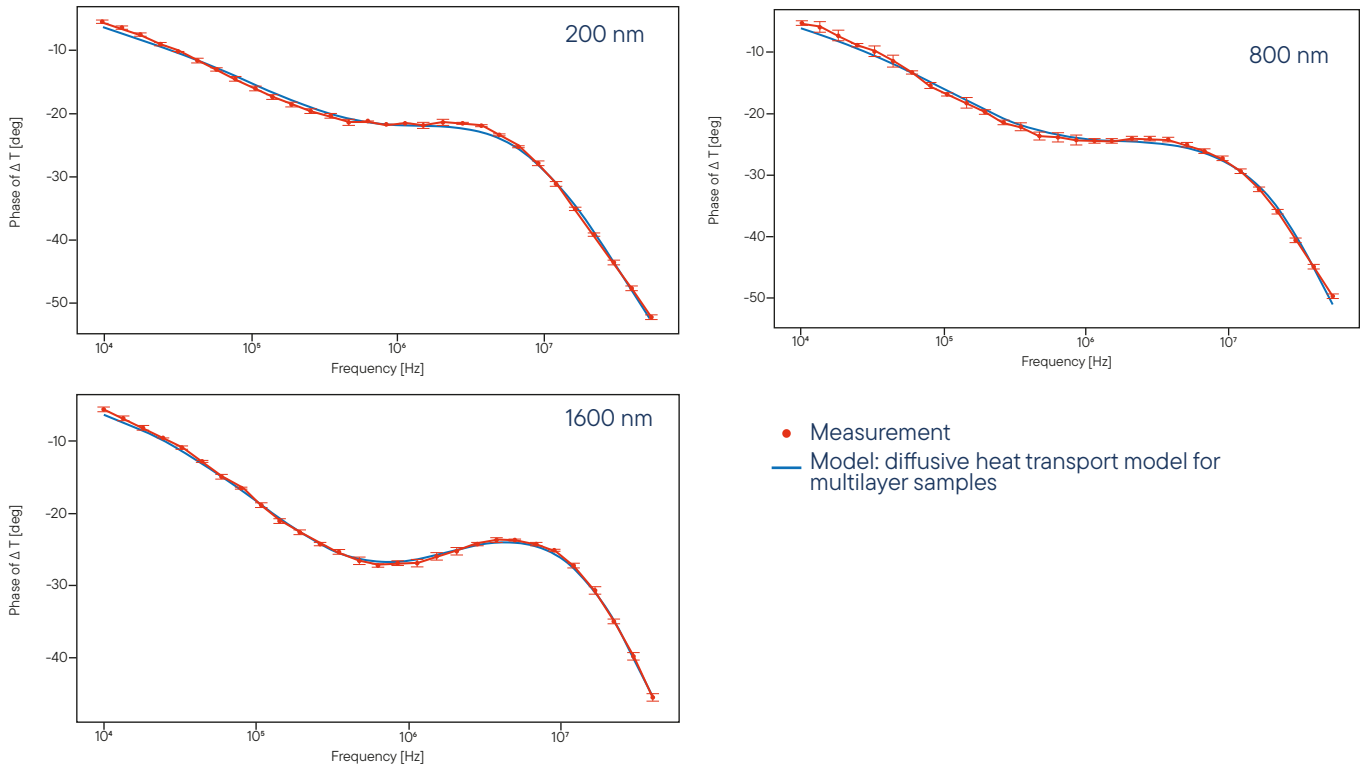

	200 nm	800 nm	1600 nm
Thermal boundary conductance TBC / $\frac{MW}{m^2K}$	68.549 ± 6.922	48.783 ± 1.245	44.368 ± 0.468
Thermal conductivity λ **/** $\frac{W}{mK}$	13.73 ± 1.56	38.57 ± 2.58	41.43 ± 0.85
Thermal diffusivity α **/** $\frac{mm^2}{s}$	5.15 ± 0.73	11.26 ± 1.45	10.26 ± 0.39
Thermal effusivity e / $\frac{Ws^{1/2}}{m^2K}$	6049.0 ± 534.0	11493.0 ± 205.0	12930.0 ± 100.0
Volumetric heat capacity $C_p \cdot \rho$ / $\frac{MJ}{m^3K}$	2.67 ± 0.3	3.42 ± 0.23	4.04 ± 0.08

LINSEIS

pushing boundaries

LINSEIS GmbH Germany

Vielitzerstr. 43
95100 Selb

Tel.: (+49) 9287 880 0
E-mail: info@linseis.de

LINSEIS Inc. USA

109 North Gold Drive
Robbinsville, NJ 08691

Tel.: (+1) 609 223 2070
E-mail: info@linseis.com

LINSEIS China

Kaige Scientific Park
Room 120, Building T3,
No.1220 Yuqiao Road, Pudong,
Shanghai

Tel.: (+86) 61 90 12 03
Tel.: (+86) 50 55 06 42
E-mail: info@linseis.com.cn

LINSEIS India

Plot 65, 2nd Floor, Sai Enclave,
Sector 23, Dwarka05-800
110077 New Delhi

Tel.: +91-11-42883851
E-mail: sales@linseis.in

WWW.LINSEIS.COM

Follow us on LinkedIn Linseis Thermal Analysis

08/2026